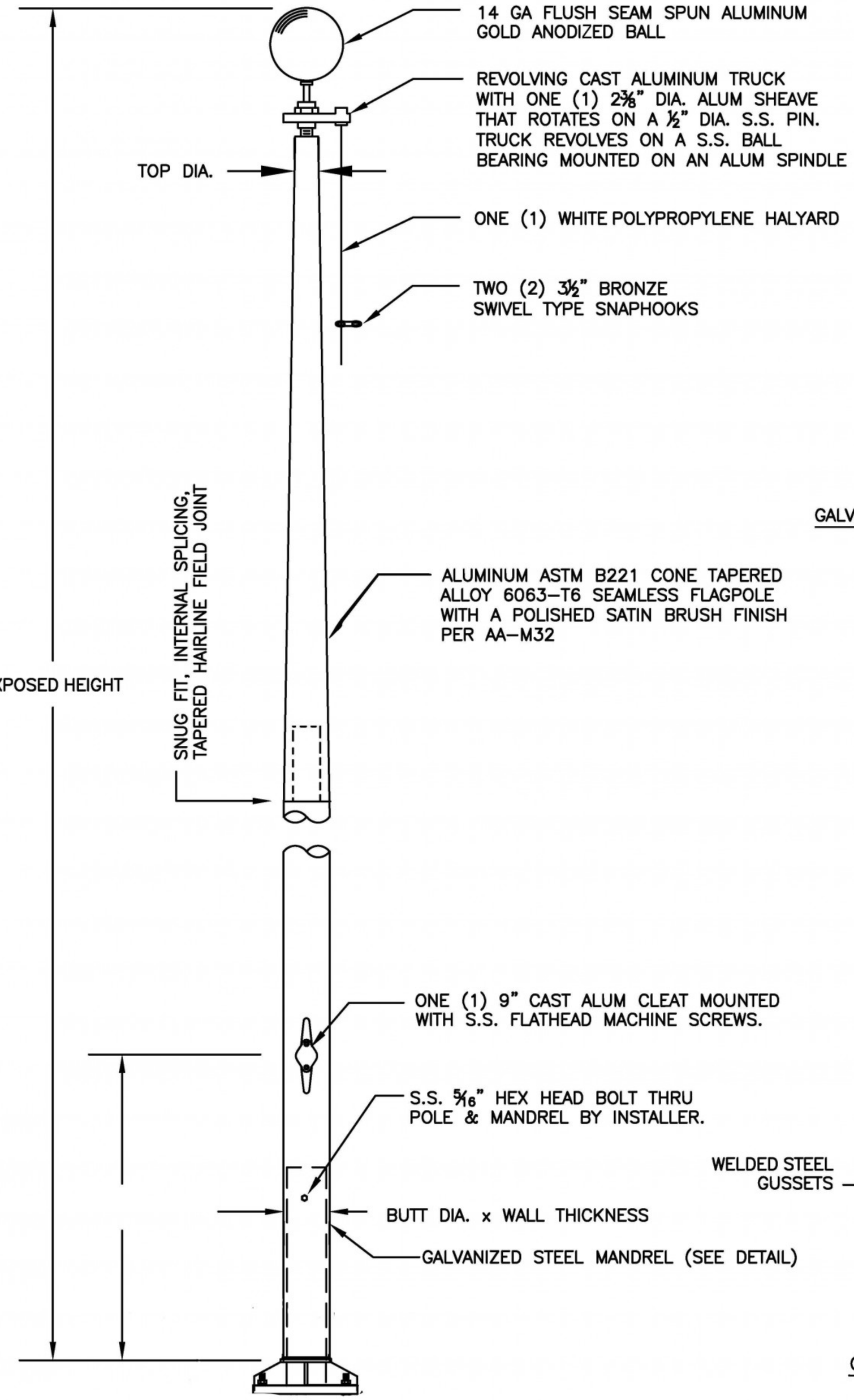

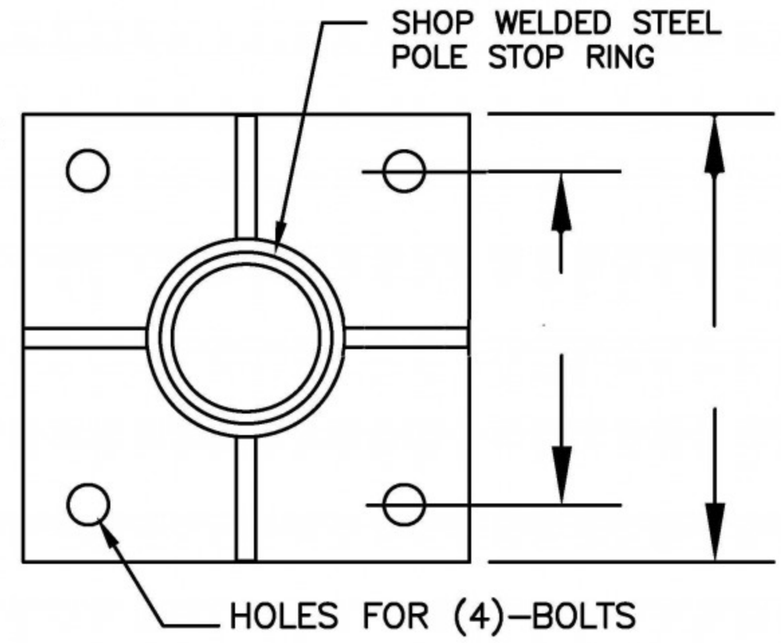

GALVANIZED STEEL MANDREL– PLAN VIEW

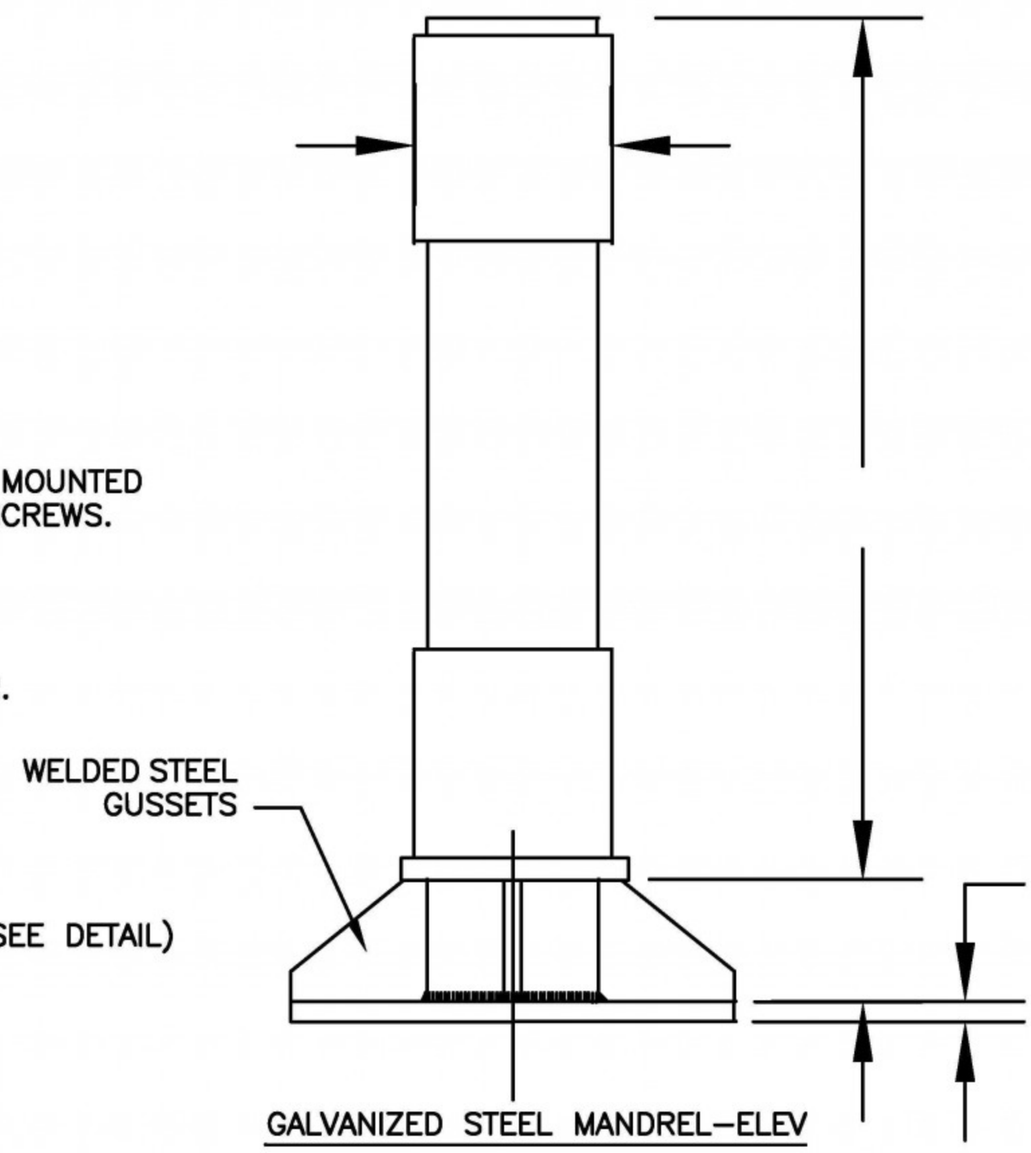

GALVANIZED STEEL MANDREL–ELEV