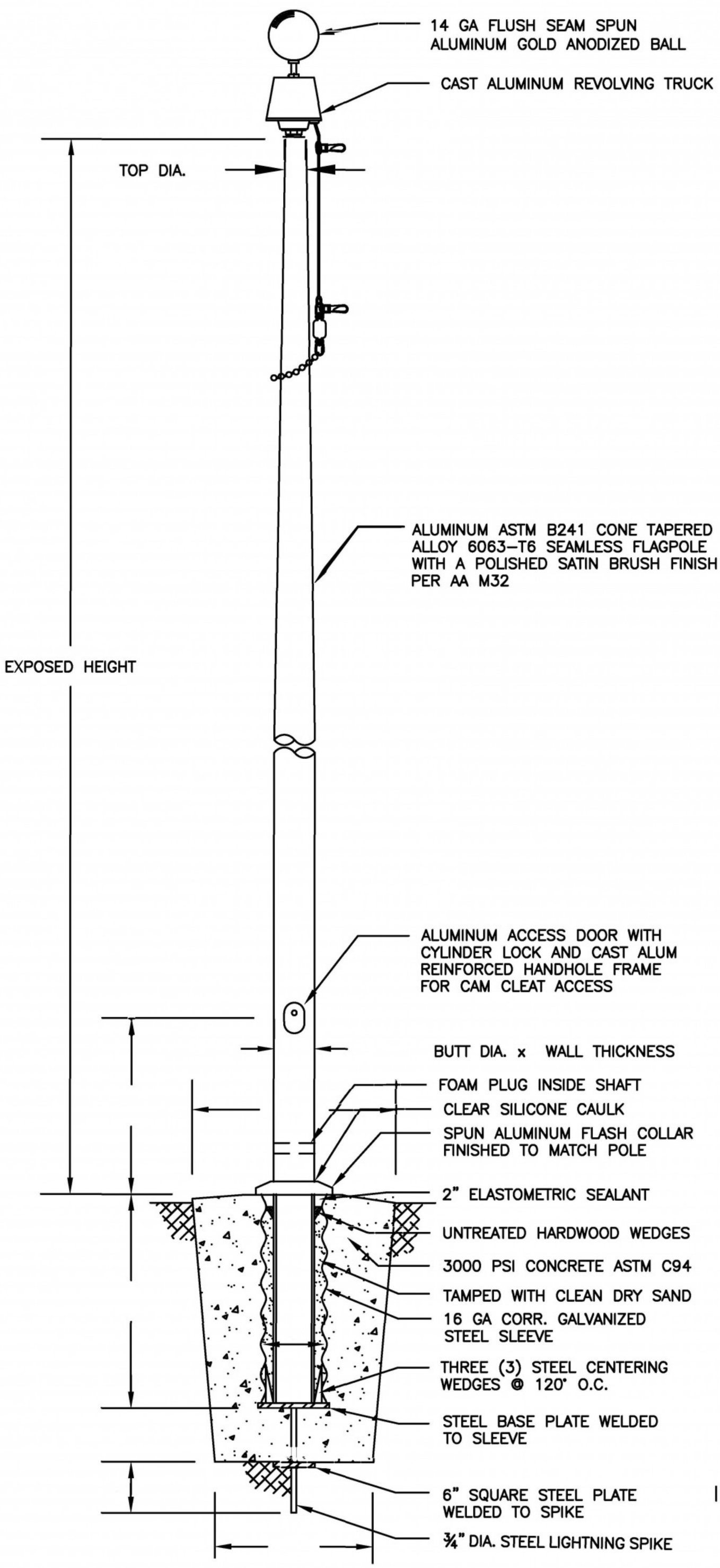

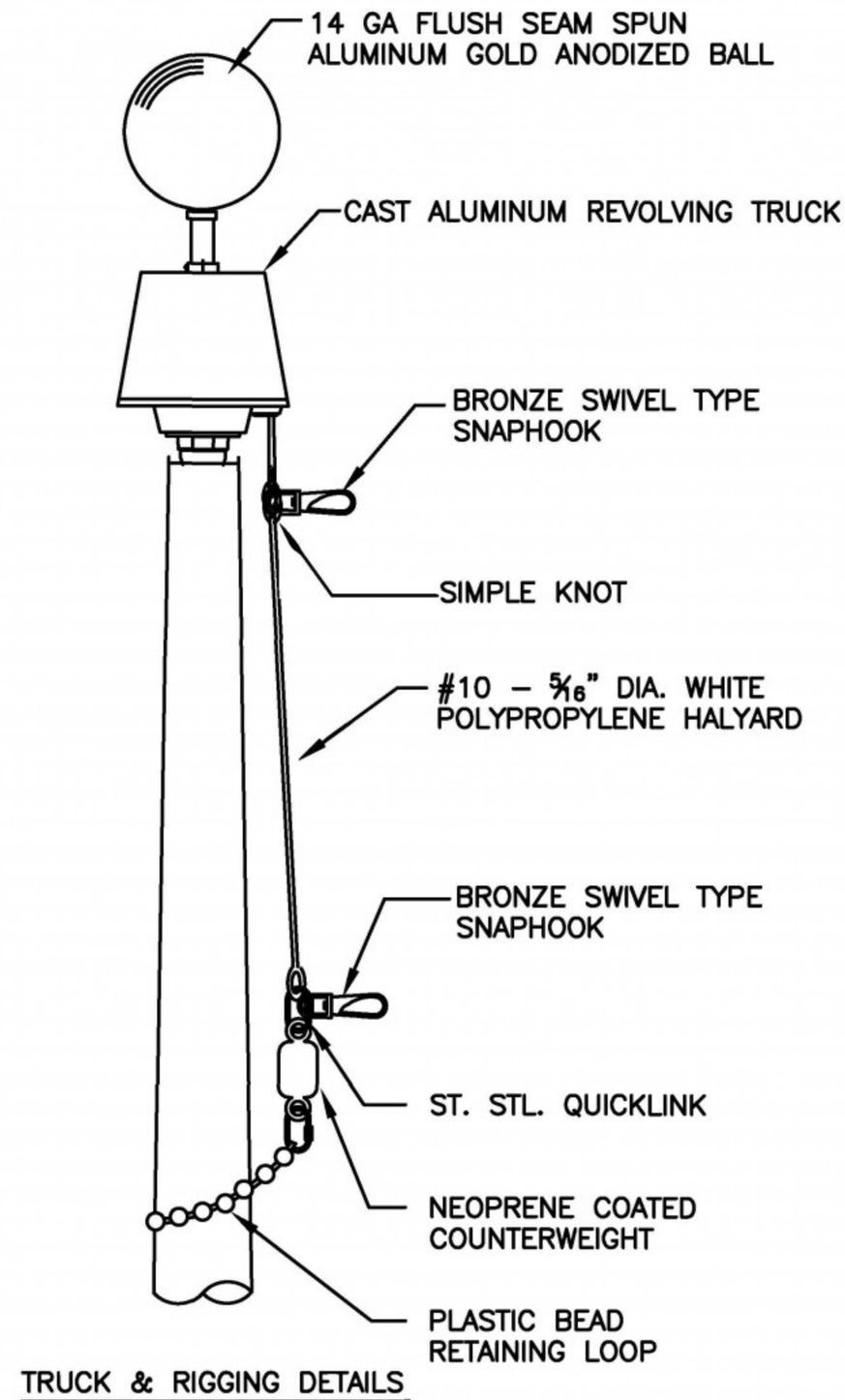

TRUCK & RIGGING DETAILS

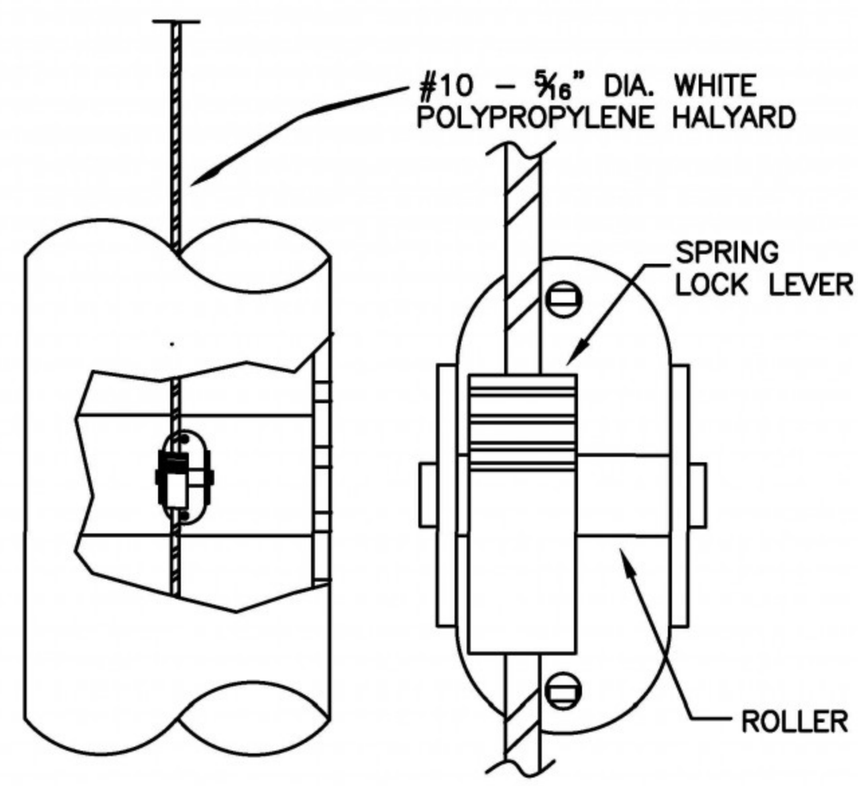

INTERNAL CAM CLEAT SYSTEM

INTERNAL HALYARD CAM CLEAT FLAGPOLES